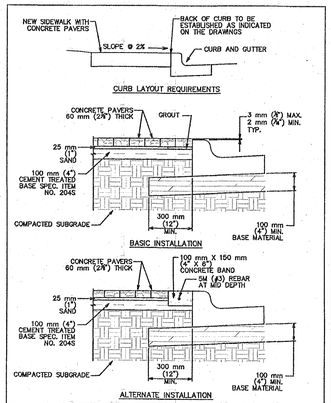

NOTES:
1. THE CONCRETE PAVERS SHALL MEET THE REQUIREMENTS OF STANDARD SPECIFICATION ITEM NO. 480S, "CONCRETE PAVER UNITS".
2. THE GROUT MIX SHALL MEET THE REQUIREMENTS OF SECTION 485S.3.E, "GROUT MIX" OF STANDARD SPECIFICATION ITEM NO. 485S,"CONCRETE PAVER UNITS FOR SIDEWALK RAMPS".
3. THE FIRST TWO ROWS OF CONCRETE PAVERS ADJACENT TO THE BACK OF CURB SHALL BE SET IN A 25 mm (1") THICK GROUT LAYER.
4. AS AN ALTERNATE TO SETTING THE FIRST TWO ROWS OF CONCRETE PAVERS IN A GROUT LAYER, A PC CONCRETE BAND (CLASS A, ITEM 403S, "CONCRETE FOR STRUCTURES"), 100 mm (4") DEEP AND 150 mm (6") WIDE, SHALL BE CONSTRUCTED ALONG THE BACK OF CURB.

ACCESSIBILITY NOTE:

CONCRETE PAVERS TO BE NON-BEVELED.

CITY OF AUSTIN DEPARTMENT OF PUBLIC WORKS		SIDEWALK PAVER INSTALLATION– PAVERS ALONG BACK OF CURB	
RECORD COPY SIGNED BY BILL GARDNER	9/14/05 ADOPTED	THE ARCHITECT/ENGINEER ASSUMES RESPONSIBILITY FOR APPROPRIATE USE OF THIS STANDARD.	STANDARD NO. 480S–5 1 OF 2

CITY OF AUSTIN DEPARTMENT OF PUBLIC WORKS			STANDARD NO.
RECORD COPY SIGNED BY BILL GARDNER	9/14/05 ADOPTED	THE ARCHITECT/ENGINEER ASSUMES RESPONSIBILITY FOR APPROPRIATE USE OF THIS STANDARD.	480S–5 2 OF 2

1 PAVER INSTALLATION DETAILS

NTS

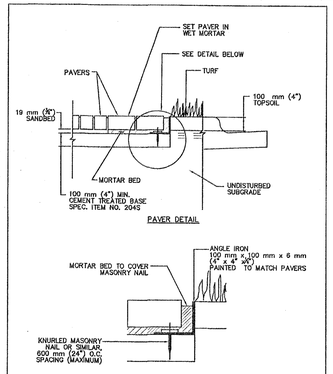

CITY OF AUSTIN DEPARTMENT OF PUBLIC WORKS		SIDEWALK PAVER RESTRAINT	
RECORD COPY SIGNED BY BILL GARDNER	06/21/07 ADOPTED	THE ARCHITECT/ENGINEER ASSUMES RESPONSIBILITY FOR APPROPRIATE USE OF THIS STANDARD.	STANDARD NO. 480S–5A 1 OF 2

NOTES:
1. THE CONCRETE PAVERS SHALL MEET THE REQUIREMENTS OF STANDARD SPECIFICATION ITEM NO. 480S, "CONCRETE PAVER UNITS".
2. THE GROUT MIX SHALL MEET THE REQUIREMENTS OF SECTION 485S.3.E, "GROUT MIX" OF STANDARD SPECIFICATION ITEM NO. 485S,"CONCRETE PAVER UNITS FOR SIDEWALK RAMPS".
3. EDGE RESTRAINTS SHALL NOT BE INSTALLED ON TOP OF THE BEDDING SAND.
4. THE FIRST TWO ROWS OF CONCRETE PAVERS ADJACENT TO THE BACK OF CURB SHALL BE SET IN A 25 mm (1") THICK GROUT LAYER.
5. AS AN ALTERNATE TO SETTING THE FIRST TWO ROWS OF CONCRETE PAVERS IN A GROUT LAYER, A PC CONCRETE BAND (CLASS A, ITEM 403S, "CONCRETE FOR STRUCTURES"), 100 mm (4") DEEP AND 150 mm (6") WIDE, MAY BE CONSTRUCTED ALONG THE BACK OF CURB.

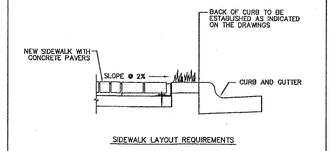

CITY OF AUSTIN DEPARTMENT OF PUBLIC WORKS		SIDEWALK PAVER RESTRAINT	
RECORD COPY SIGNED BY BILL GARDNER	06/21/07 ADOPTED	THE ARCHITECT/ENGINEER ASSUMES RESPONSIBILITY FOR APPROPRIATE USE OF THIS STANDARD.	STANDARD NO. 480S–5A 2 OF 2

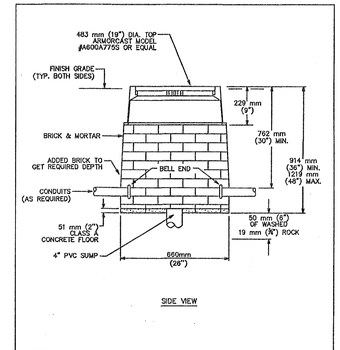

NOTES:
1. CONDUIT SHOULD ENTER PULL BOX BETWEEN SEPARATE BRICK LAYERS.
2. WHEN PULL BOX IS PLACED IN A SIDEWALK, THE LID SHALL BE FLUSH WITH THE SIDEWALK SURFACE.
3. WHEN A PULL BOX IS PLACED IN A NATURAL GROUND SURFACE, THE LID SHALL BE RAISED 13 mm (½") ABOVE GRADE.

DEPARTMENT OF PUBLIC WORKS		TYPE B PULL BOX	
RECORD COPY SIGNED BY LEON BARBA	11/17/03 ADOPTED	THE ARCHITECT/ENGINEER ASSUMES RESPONSIBILITY FOR APPROPRIATE USE OF THIS STANDARD.	STANDARD NO. 834S–3

2 TYPE B PULL BOX DETAIL

NTS

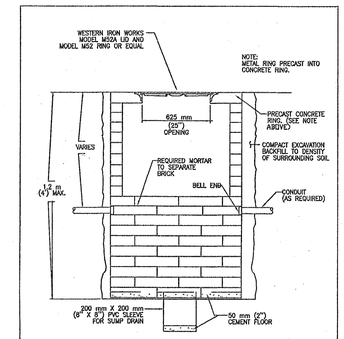

CITY OF AUSTIN DEPARTMENT OF PUBLIC WORKS		TYPE C PULL BOX WITH LIGHT WEIGHT COVER	
RECORD COPY SIGNED BY LEON BARBA	9/17/01 ADOPTED	THE ARCHITECT/ENGINEER ASSUMES RESPONSIBILITY FOR APPROPRIATE USE OF THIS STANDARD.	STANDARD NO. 834S–5

3 TYPE C PULL BOX DETAIL

NTS

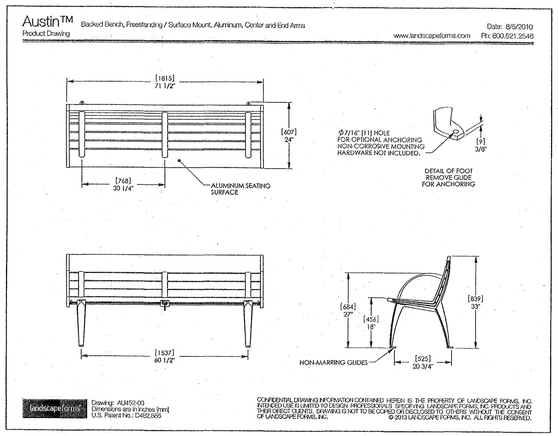

3 BENCH DETAIL

NTS

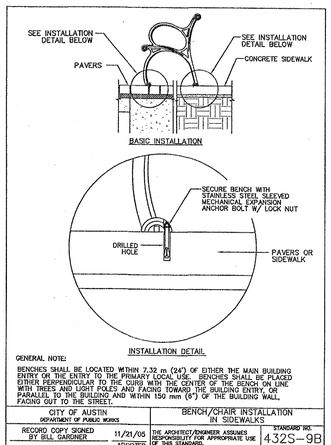

GENERAL NOTE:

BENCHES SHALL BE LOCATED WITHIN 7.32 m (24') OF EITHER THE MAIN BUILDING ENTRY OR THE ENTRY TO THE PRIMARY LOCAL USE. BENCHES SHALL BE PLACED EITHER PERPENDICULAR TO THE CURB WITH THE CENTER OF THE BENCH ON LINE WITH TREES AND LIGHT POLES AND FACING TOWARD THE BUILDING ENTRY, OR PARALLEL TO THE BUILDING AND WITHIN 150 mm (6") OF THE BUILDING WALL, FACING OUT TO THE STREET.

CITY OF AUSTIN DEPARTMENT OF PUBLIC WORKS		BENCH/CHAIR INSTALLATION IN SIDEWALKS	
RECORD COPY SIGNED BY BILL GARDNER	11/21/05 ADOPTED	THE ARCHITECT/ENGINEER ASSUMES RESPONSIBILITY FOR APPROPRIATE USE OF THIS STANDARD.	STANDARD NO. 432S–9B

4 BENCH INSTALLATION DETAIL

NTS

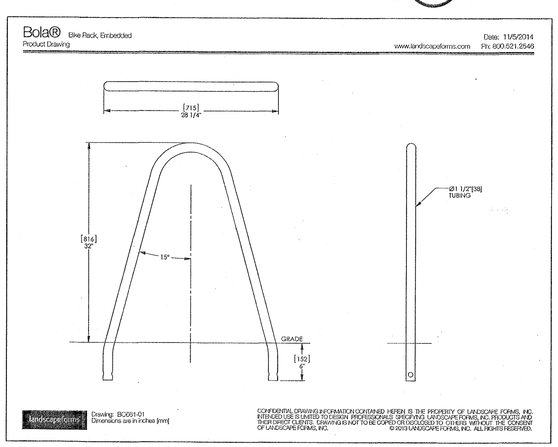

5 BICYCLE RACK DETAIL

NTS

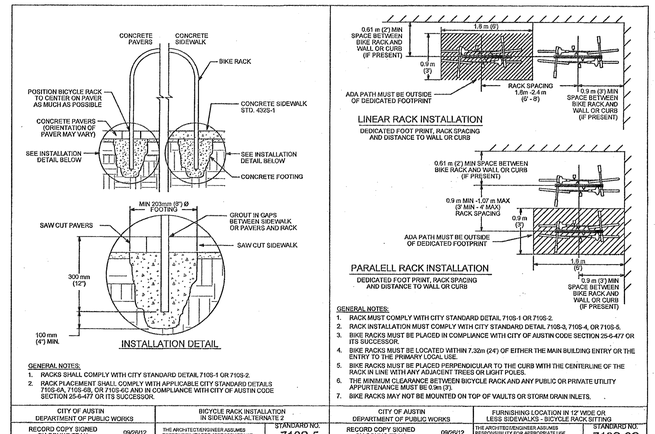

GENERAL NOTES:
1. RACK MUST COMPLY WITH CITY STANDARD DETAIL 710S-1 OR 710S-2.
2. RACK INSTALLATION MUST COMPLY WITH CITY STANDARD DETAIL 710S-3, 710S-4, OR 710S-5.
3. BIKE RACKS MUST BE PLACED IN COMPLIANCE WITH CITY OF AUSTIN CODE SECTION 25-6-477 OR ITS SUCCESSOR.
4. BIKE RACKS MUST BE LOCATED WITHIN 7.32m (24') OF EITHER THE MAIN BUILDING ENTRY OR THE ENTRY TO THE PRIMARY LOCAL USE.
5. BIKE RACKS MUST BE PLACED PERPENDICULAR TO THE CURB WITH THE CENTERLINE OF THE RACK IN LINE WITH ANY ADJACENT TREES OR LIGHT POLES.
6. THE MINIMUM CLEARANCE BETWEEN BICYCLE RACK AND ANY PUBLIC OR PRIVATE UTILITY APPURTENANCE MUST BE 0.9m (3').
7. BIKE RACKS MAY NOT BE MOUNTED ON TOP OF VAULTS OR STORM DRAIN INLETS.

CITY OF AUSTIN DEPARTMENT OF PUBLIC WORKS		BICYCLE RACK INSTALLATION IN SIDEWALKS-ALTERNATE 2		CITY OF AUSTIN DEPARTMENT OF PUBLIC WORKS		FURNISHING LOCATION IN 12' WIDE OR LESS SIDEWALKS - BICYCLE RACK SITTING	
RECORD COPY SIGNED BY COUNG TRAN	09/05/12 ADOPTED	THE ARCHITECT/ENGINEER ASSUMES RESPONSIBILITY FOR APPROPRIATE USE OF THIS STANDARD.	STANDARD NO. 710S-5 1 OF 1	RECORD COPY SIGNED BY COUNG TRAN	09/05/12 ADOPTED	THE ARCHITECT/ENGINEER ASSUMES RESPONSIBILITY FOR APPROPRIATE USE OF THIS STANDARD.	STANDARD NO. 710S-6C 1 OF 1

6 BICYCLE RACK INSTALLATION DETAIL

NTS

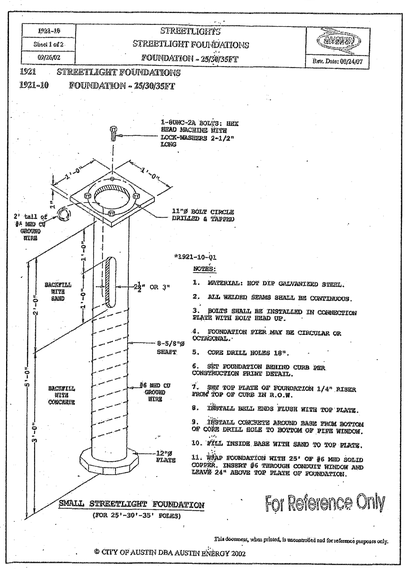

7 STREETLIGHT FOUNDATION DETAIL

NTS

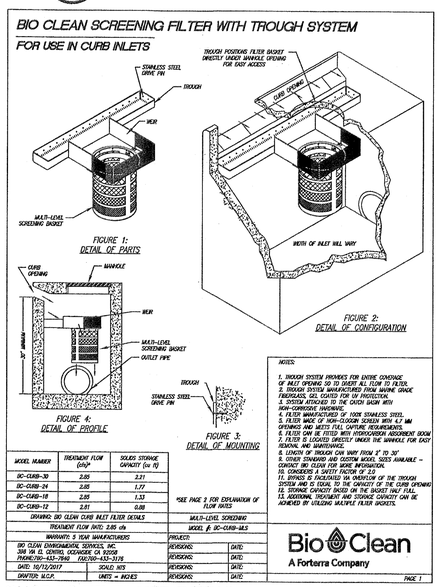

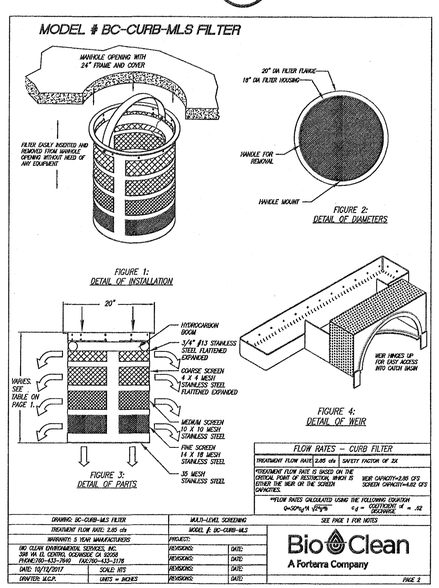

8 CURB INLET FILTER DETAIL

NTS

Consort, Inc. Copyright © 2019,
NO PART OF THIS SITE PLAN MAY BE REPRODUCED OR DISTRIBUTED IN ANY FORM OR BY ANY MEANS, OR STORED IN A DATA BASE OR RETRIEVAL SYSTEM, WITHOUT THE PRIOR WRITTEN PERMISSION OF CONSORT, INC.

FILE: J:\WORK\1559-001\SITE DEVELOPMENT PLANS\C-SITE PLAN\11-SP DET.DWG – PLOTTED ON: 02/27/20 3:10PM – BY: ATOURGATE

STATE OF TEXAS
MARK T. BURSON
66334
LICENSED PROFESSIONAL ENGINEER
02/27/20

SARDIS LONE STAR, LLC.
84 WOOSTER STREET,
SUITE 603
NEW YORK, NY 10012

RIVERSIDE AND LAMAR MIXED-USE
1211 WEST RIVERSIDE BLVD.

SITE PLAN DETAILS 2

Consort, Inc
3000 Esc. Bend, Suite 100 / Austin, TX 78746 / (512) 455-0300
T.B.P.E. Firm Registration No. F-839

JOB NO.: 1559-001
DRAWN BY:
SCALE:
DATE: 02/27/20
FILE:
XREF:
REV./CORR:

SITE PLAN RELEASE Sheet 11 of 41
FILE NUMBER: SP-2019-0056C EXPIRATION DATE: 3-13-25
CASE MANAGER: RENEE JOHNS APPLICATION DATE: 02/12/2019
REVIEWED FOR GENERAL COMPLIANCE ON:
APPROVED ~~BY PLANNING COMMISSION~~ ON: 3-13-20
APPROVED BY CITY COUNCIL ON:
under Section 112 of Chapter 25-5 of Austin City Code.
Director, Development Services Department
RELEASED FOR:
GENERAL COMPLIANCE: Zoning: PUD & CS-H
Rev. 1 Correction 1
Rev. 2 Correction 2
Rev. 3 Correction 3
RELEASE OF THIS APPLICATION DOES NOT CONSTITUTE A VERIFICATION OF ALL DATA, INFORMATION AND CALCULATIONS SUPPLIED BY THE APPLICANT. THE ENGINEER OF RECORD IS SOLELY RESPONSIBLE FOR THE COMPLETENESS, ACCURACY AND ADEQUACY OF THEIR SUBMITTAL, WHETHER OR NOT THE APPLICATION IS REVIEWED FOR CODE COMPLIANCE BY CITY ENGINEERS.

SHEET 11 of 41

SP-2019-0056C