LOADS AND DESIGN CRITERIA

1. DEAD LOADS
   A. CONCRETE SELF WEIGHT 150 PCF
2. LIVE LOADS
   A. FLOOR 250 PSF

FORMING PLAN NOTES

1. VERIFY ALL DIMENSIONS, DROPS, SLOPES, ETC WITH ARCH PRIOR TO CONSTRUCTION.
2. DETENTION POND AND TREE BRIDGE CONCRETE SHALL BE 4,000 PSI STRENGTH
3. ALL ELEVATIONS ARE RELATIVE TO TOC = PER CIVIL

RETAINING WALL PLAN NOTES

1. WALLS AND FOOTINGS ARE BASED ON DESIGN PARAMETERS GIVEN IN GEOTECHNICAL REPORT #96175275, DATED 10/04/17, BY TERRACON .
2. ALL ELEVATIONS ARE FOR DESIGN PURPOSES ONLY AND SHALL BE VERIFIED WITH CIVIL AND FIELD CONDITIONS PRIOR TO CONSTRUCTION.
3. VERIFY ALL DIMENSIONS, DROPS, SLOPES, ETC WITH ARCH, CIVIL AND LANDSCAPE PRIOR TO CONSTRUCTION.
4. ALL PAVING, GRADING, VEGETATION AND POND INFORMATION SHOWN IS FOR REFERENCE ONLY. CIVIL STORM DRAINS ARE NOT SHOWN. REFERENCE CURRENT ARCH, CIVIL AND LANDSCAPE FOR REQUIREMENTS.
5. ALL FOOTINGS SHALL BEAR 6" INTO STRATUM III SOILS .
6. MATERIALS:
   A. BACKFILL: CLEAN, FREE DRAINING, GRANULAR MATERIAL (CRUSHED LIMESTONE BASE, GRAVEL OR SAND) PER GEOTECHNICAL REPORT.
   B. FILTER FABRIC: MIRAFI 140N OR EQUAL.
   C. PERFORATED DRAIN PIPE: 4"Ø SCHED 40 PVC W/ (2) ROWS 1/2"Ø HOLES @ 5" OC PARALLEL TO AXIS OF PIPE AND SPACED 120° APART. ORIENT PIPE WITH PERFORATIONS ON TOP. SLOPE 1/8" PER FT TO DRAIN OR PROVIDE 2"Ø WEEP DRAINS @ MAX 6'-0" OC. WRAP PIPE, WITH MIN 2 SQ FT OF BACKFILL MATERIAL, IN FILTER FABRIC.
7. CAP BACKFILL W/ MIN 1'-0" CLAYEY MATERIAL.
8. PROVIDE #4 CORNER BARS W/ MIN 24" LAP AT EACH HORZ/LONG BAR AT CORNERS AND INTERSECTIONS IN WALLS/FOOTINGS.
9. EXTEND VERT REINF TO WITHIN 2" FROM TOP OF WALL.
10. REF DETAIL P FOR RCP PENETRATIONS IN CONCRETE WALLS.
11. REF CIVIL FOR WATERSTOP REQUIREMENTS AT BOTTOM OF WALLS AND CONSTRUCTION JOINTS.

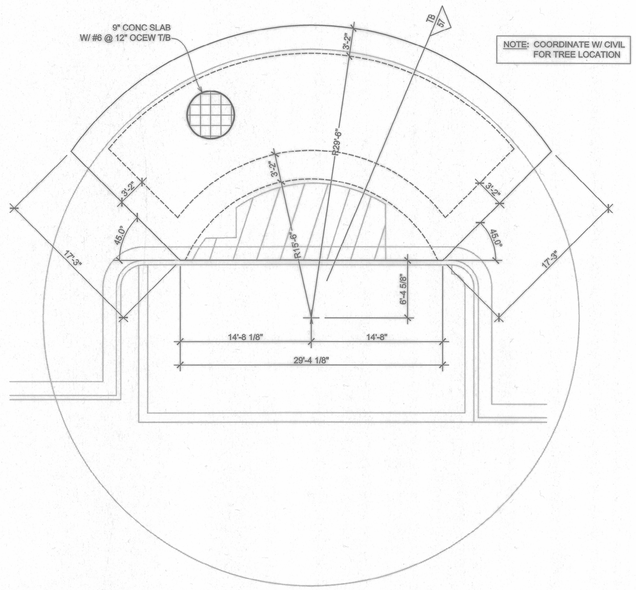

NOTE: COORDINATE W/ CIVIL FOR TREE LOCATION

TREE BRIDGE FOUNDATION PLAN

1/8"=1'-0"

FOR CITY USE ONLY:

SITE PLAN APPROVAL Sheet ___ of ___
FILE NUMBER: SP-2017-0503C.SH APPLICATION DATE: DECEMBER 11, 2017
APPROVED BY COMMISSION ON/ADMIN/ UNDER SECTION 112 OF
CHAPTER 25-5 OF THE CITY OF AUSTIN CODE.
EXPIRATION DATE (25-5-81.1DC) 7/21/21 CASE MANAGER C. DAVIS
PROJECT EXPIRATION DATE (ORD.#970905-A)_____ DWPZ ____ DDZ ____

Director, Development Services Department

RELEASED FOR GENERAL COMPLIANCE:_____ ZONING: MF-3

Rev. 1_____ Correction 1 _____
Rev. 2_____ Correction 2 _____
Rev. 3_____ Correction 3 _____

FINAL PLAT MUST BE RECORDED BY THE PROJECT EXPIRATION DATE, IF APPLICABLE. SUBSEQUENT SITE PLANS WHICH DO NOT COMPLY WITH THE CODE CURRENT AT THE TIME OF FILING, AND ALL REQUIRED BUILDING PERMITS AND/OR A NOTICE OF CONSTRUCTION (IF A BUILDING PERMIT IS NOT REQUIRED), MUST ALSO BE APPROVED PRIOR TO THE PROJECT EXPIRATION DATE.

SP-2017-053C.SH

TEXAS DESIGN INTERESTS, LLC
AUSTIN • HOUSTON
CIVIL & STRUCTURAL ENGINEERING
5906 OLD FREDERICKSBURG RD
SUITE 300
AUSTIN, TX 78749
(512) 301-3389 (o)
(512) 301-3348 (f)

Patyways at Goodrich Place
AUSTIN, TEXAS
HUMPHREYS & PARTNERS

STATE OF TEXAS
JUAN D. PONCE
126857
REGISTERED PROFESSIONAL ENGINEER
04/25/18
FIRM REG. # F-8601

DETENTION POND & TREE BRIDGE PLANS

PROJECT # 817-105

DATE 04/25/18

SHEET 55 of 57