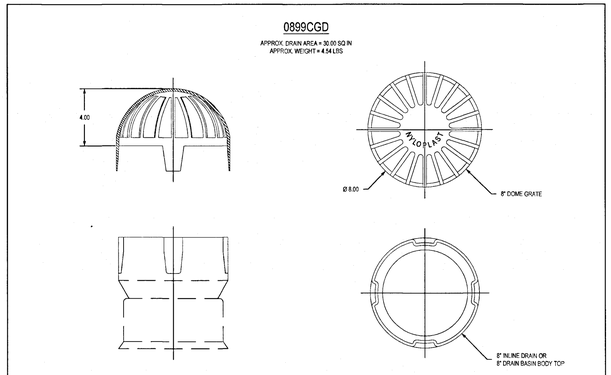

DIMENSIONS ARE FOR REFERENCE ONLY
ACTUAL DIMENSIONS MAY VARY
DIMENSIONS ARE IN INCHES
QUALITY: MATERIALS SHALL CONFORM TO ASTM A536 GRADE 70-50-05
PAINT: CASTINGS ARE FURNISHED WITH A BLACK PAINT
LOCKING DEVICE AVAILABLE UPON REQUEST SEE DRAWING NO. 7005-110-228

THIS PRINT DISCLOSES SUBJECT MATTER IN WHICH NYLOPLAST HAS PROPRIETARY RIGHTS. THE RECEIPT OR POSSESSION OF THIS PRINT DOES NOT CONVEY, TRANSFER, OR LICENSE THE USE OF THE DESIGN OR TECHNICAL INFORMATION SHOWN HEREIN. REPRODUCTION OF THIS PRINT OR ANY INFORMATION CONTAINED HEREIN, OR MANUFACTURE OF ANY ARTICLE HEREFROM, FOR THE DISCLOSURE TO OTHERS IS FORBIDDEN, EXCEPT BY SPECIFIC WRITTEN PERMISSION FROM NYLOPLAST. 8DCH24.DWG(NP)

DRAWN BY	ESC	MATERIAL	DUCTILE IRON
DATE	3-3-08		
REVISED BY	ESC	PROJECT NO./NAME	
DATE	3-13-10		
DWG SIZE	A	SCALE 1:4	SHEET 1 OF 1

Nyloplast
3130 Verona Ave
Buford, GA 30518
PHN (770) 932-2443
FAX (770) 932-2490
www.nyloplast-us.com

TITLE: 8 IN DOME GRATE ASSEMBLY
DWG NO. 7005-110-087 REV B

5 8" DOME GRATE
SCALE: N.T.S.

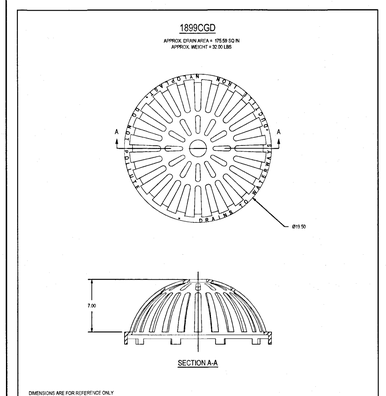

DIMENSIONS ARE FOR REFERENCE ONLY
ACTUAL DIMENSIONS MAY VARY
DIMENSIONS ARE IN INCHES
QUALITY: MATERIALS SHALL CONFORM TO ASTM A536 GRADE 70-50-05
PAINT: CASTINGS ARE FURNISHED WITH A BLACK PAINT
LOCKING DEVICE AVAILABLE UPON REQUEST

THIS PRINT DISCLOSES SUBJECT MATTER IN WHICH NYLOPLAST HAS PROPRIETARY RIGHTS. THE RECEIPT OR POSSESSION OF THIS PRINT DOES NOT CONVEY, TRANSFER, OR LICENSE THE USE OF THE DESIGN OR TECHNICAL INFORMATION SHOWN HEREIN. REPRODUCTION OF THIS PRINT OR ANY INFORMATION CONTAINED HEREIN, OR MANUFACTURE OF ANY ARTICLE HEREFROM, FOR THE DISCLOSURE TO OTHERS IS FORBIDDEN, EXCEPT BY SPECIFIC WRITTEN PERMISSION FROM NYLOPLAST. 8DCH18.DWG(NP)

DRAWN BY	ESC	MATERIAL	DUCTILE IRON
DATE	03-08-08		
REVISED BY	CCK	PROJECT NO./NAME	
DATE	08-06-13		
DWG SIZE	A	SCALE 1:6	SHEET 1 OF 1

Nyloplast
3130 Verona Ave
Buford, GA 30518
PHN (770) 932-2443
FAX (770) 932-2490
www.nyloplast-us.com

TITLE: 18 IN DOME GRATE
DWG NO. 7005-110-216 REV B

4 18" DOME GRATE
SCALE: N.T.S.

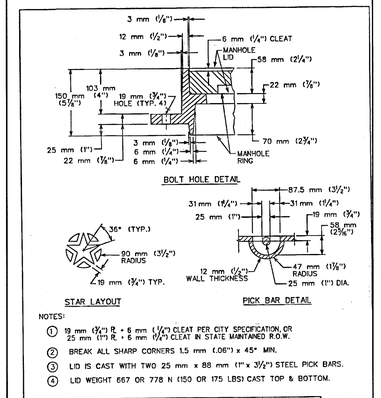

NOTES:

1. 19 mm (3/4") R. + 6 mm (1/4") CLEAT PER CITY SPECIFICATION, OR 25 mm (1") R. + 6 mm (1/4") CLEAT IN STATE MAINTAINED R.O.W.
2. BREAK ALL SHARP CORNERS 1.5 mm (.06") x 45° MIN.
3. LID IS CAST WITH TWO 25 mm x 88 mm (1" x 3 1/2") STEEL PICK BARS.
4. LID WEIGHT 667 OR 778 N (150 OR 175 LBS) CAST TOP & BOTTOM.

TYP. WEIGHT	LID	RING	SET
CITY/STATE	667/778 N (150/175 LBS)	667 N (150 LBS	1335/1445 N (300/325 LBS)

CITY OF AUSTIN
DEPARTMENT OF WATERSHED PROTECTION AND DEVELOPMENT REVIEW
STORM DRAIN MANHOLE RING AND 610 mm (24") COVER
ADOPTED — THE ARCHITECT/ENGINEER ASSUMES RESPONSIBILITY FOR APPROPRIATE USE OF THIS STANDARD.
STANDARD NO. 503S-2S 3 OF 3

3 STORM DRAIN MANHOLE
SCALE: N.T.S.

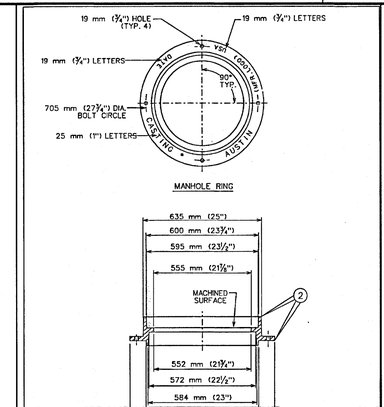

CITY OF AUSTIN
DEPARTMENT OF WATERSHED PROTECTION AND DEVELOPMENT REVIEW
STORM DRAIN MANHOLE RING AND 610 mm (24") COVER
ADOPTED — THE ARCHITECT/ENGINEER ASSUMES RESPONSIBILITY FOR APPROPRIATE USE OF THIS STANDARD.
STANDARD NO. 503S-2S 3 OF 3

2 STORM DRAIN MANHOLE
SCALE: N.T.S.

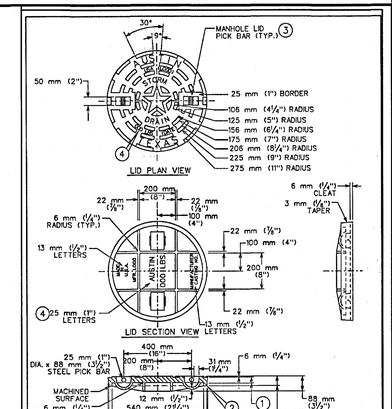

CITY OF AUSTIN
DEPARTMENT OF WATERSHED PROTECTION AND DEVELOPMENT REVIEW
STORM DRAIN MANHOLE RING AND 610 mm (24") COVER
ADOPTED — THE ARCHITECT/ENGINEER ASSUMES RESPONSIBILITY FOR APPROPRIATE USE OF THIS STANDARD.
STANDARD NO. 503S-2S 1 OF 3

1 STORM DRAIN MANHOLE
SCALE: N.T.S.

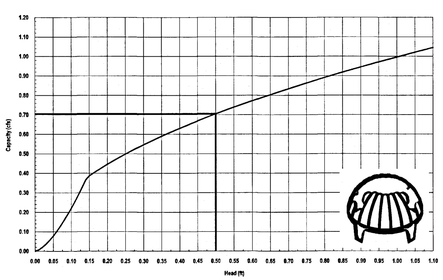

Nyloplast
3130 Verona Avenue - Buford, GA 30518
(866) 888-8479 / (770) 932-2443 • Fax: (770) 932-2490
© Nyloplast Inlet Capacity Charts June 2012

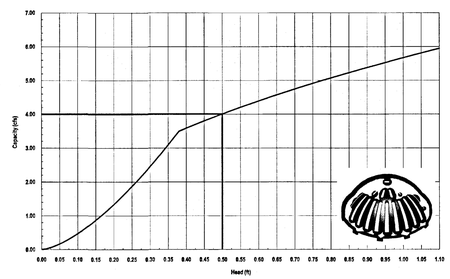

Nyloplast
3130 Verona Avenue - Buford, GA 30518
(866) 888-8479 / (770) 932-2443 • Fax: (770) 932-2490
© Nyloplast Inlet Capacity Charts June 2012

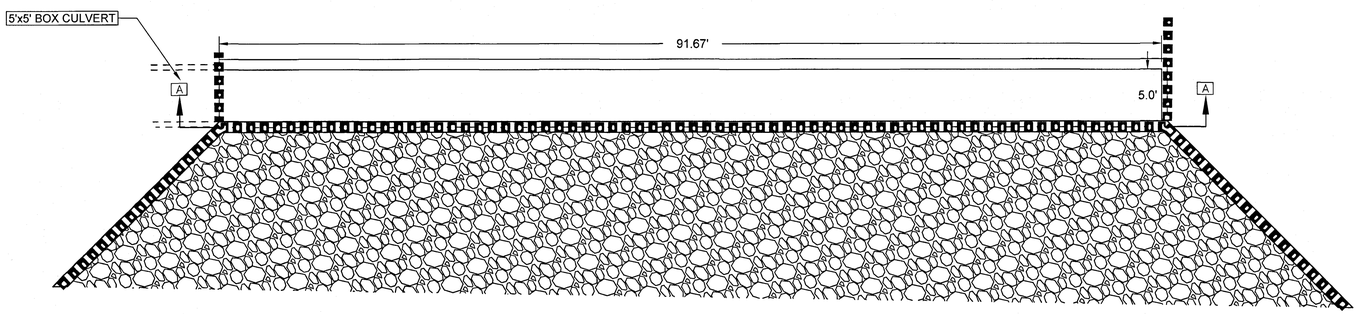

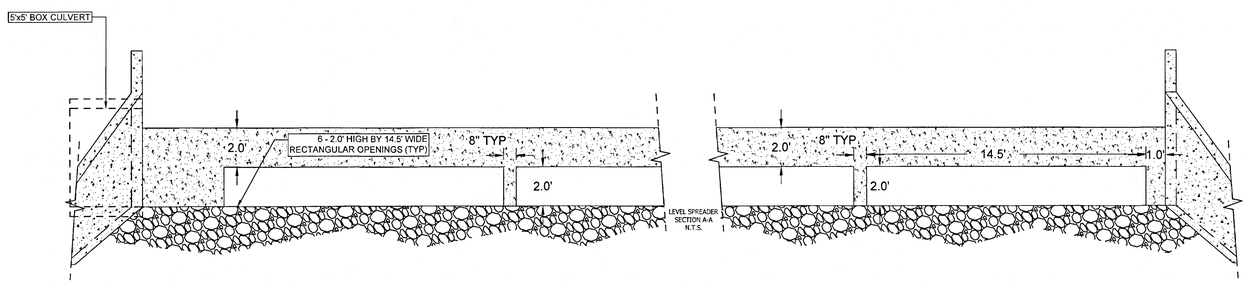

KNOCKOUT CALCULATION	
# of Knockouts	6
Knockout Area	29
Head to pass water	4.00
Max Flow (CFS)	1675.6
Velocity (FPS)	1.98

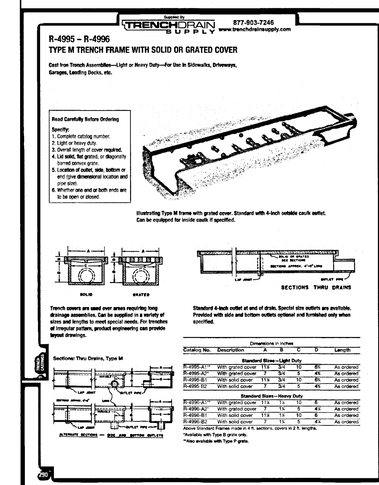

7 TRENCH DRAIN
SCALE: N.T.S.

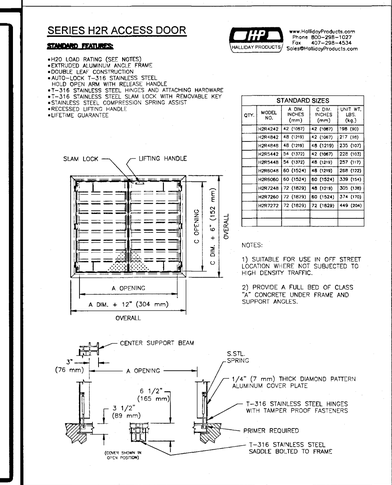

6 STORM ACCESS DOORS
SCALE: N.T.S.

SITE PLAN APPROVAL Sheet 55 of 87
FILE NUMBER SP-2018-0296C APPLICATION DATE JULY 2, 2018
APPROVED BY COMMISSION ON N/A UNDER SECTION 112 OF CHAPTER 25-5 OF THE CITY OF AUSTIN CODE.
EXPIRATION DATE (25-5-81, LDC) 12/6/22 CASE MANAGER ROSEMARY AVILA

Director, Development Services Department
RELEASED FOR GENERAL COMPLIANCE: 12/6/19 ZONING CS-V
Rev. 1 _____ Correction 1 _____
Rev. 2 _____ Correction 2 _____
Rev. 3 _____ Correction 3 _____

Final plat must be recorded by the Project Expiration Date, if applicable. Subsequent Site Plans which do not comply with the Code current at the time of filing, and all required Building Permits and/or a notice of construction (if a building permit is not required), must also be approved prior to the Project Expiration Date.

NO.	DATE	REVISION	BY
A			

WWW.BIGREDDOG.COM
TEXAS REG. NO. F-15085
512.669.5560
BIG RED DOG a division of TWGL
ENGINEERING | CONSULTING
2021 E. 5TH ST. #200
AUSTIN, TEXAS 78702

STATE OF TEXAS
VITO M. TRUPIANO
119592
LICENSED PROFESSIONAL ENGINEER

AUSTIN SOUTH LAMAR APARTMENTS
1515 SOUTH LAMAR
AUSTIN, TRAVIS COUNTY, TEXAS

STORM DETAILS

SHEET
C800
55 OF 87
SP-2018-0296C